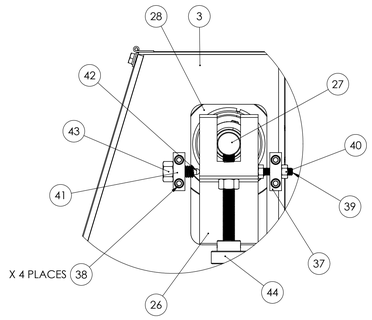

DETAIL A

TRACKING DETAILS

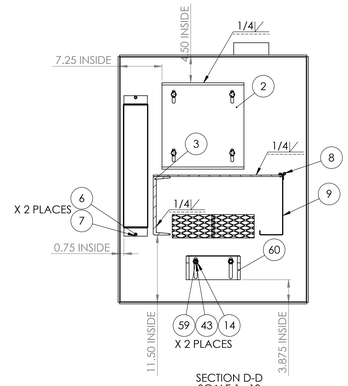

SECTION D-D
SCALE 1 : 10

FLOOR PAN MAIN FRAME AND MOTOR MOUNT WELDING DETAILS

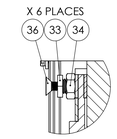

DETAIL F
SCALE 2 : 5

PLATEN LEVELING DETAILS

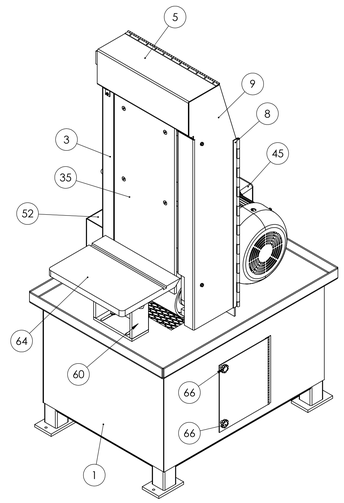

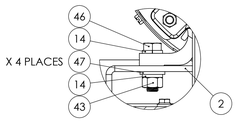

DETAIL C
SCALE 2 : 5

MOTOR MOUNT DETAILS

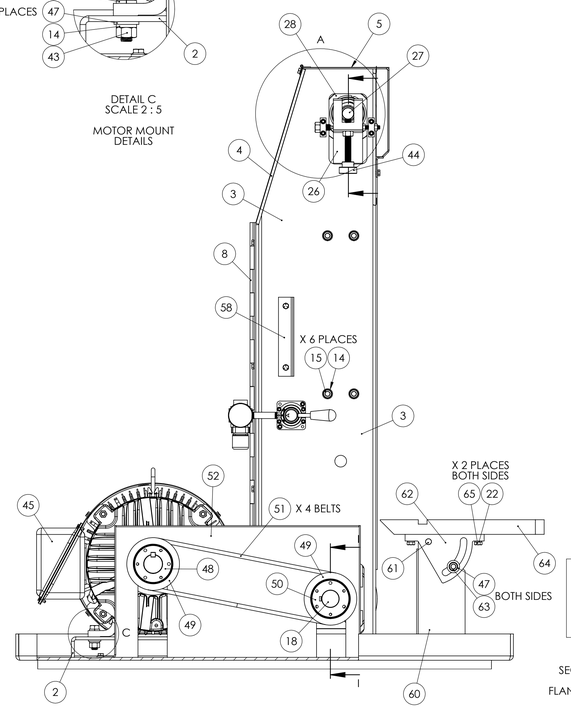

LEFT SIDE VIEW

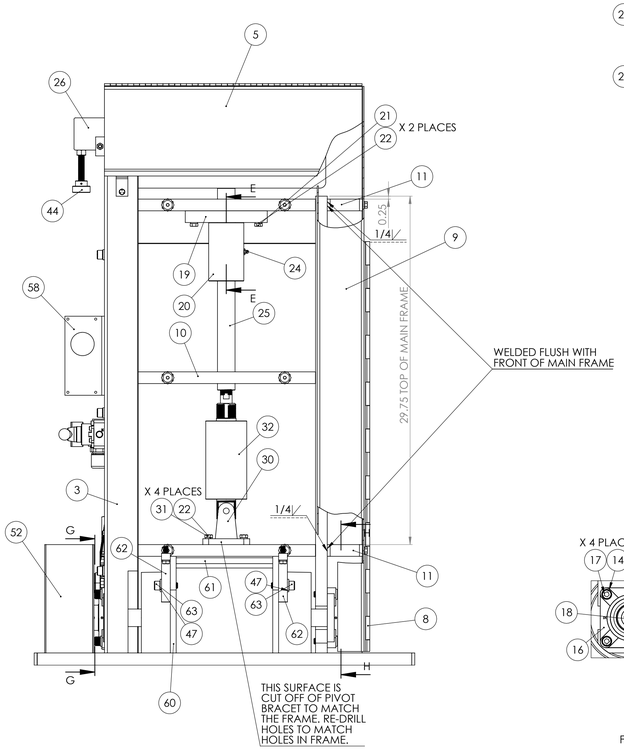

FRONT VIEW

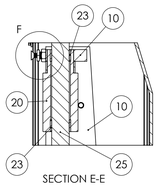

SECTION E-E

YOKE SLEEVE DETAILS

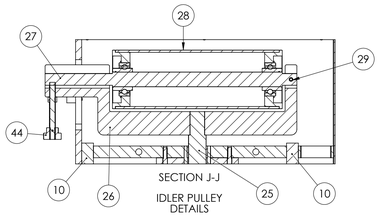

SECTION J-J

IDLER PULLEY DETAILS

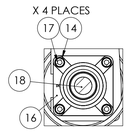

SECTION H-H

FLANGE BEARING DETAILS

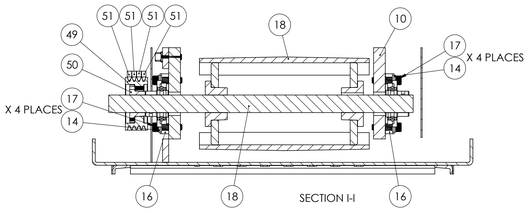

SECTION I-I

DRIVE PULLEY DETAILS

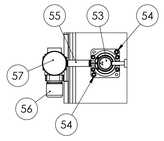

DETAIL B

PNEUMATIC DETAILS

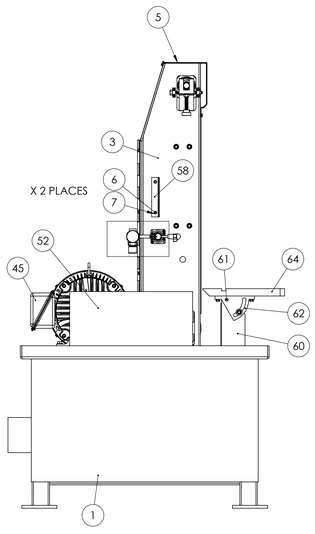

LEFT SIDE VIEW

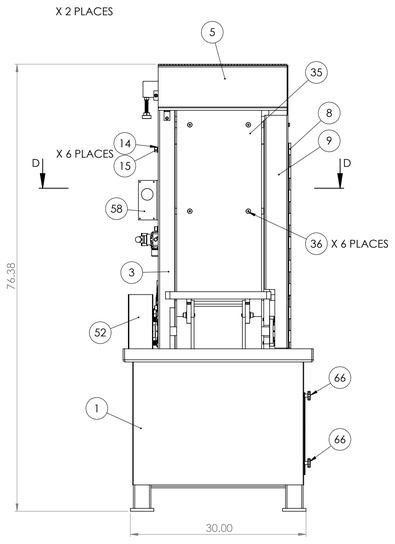

FRONT VIEW

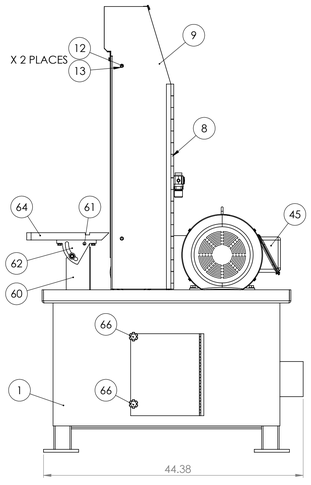

RIGHT SIDE VIEW

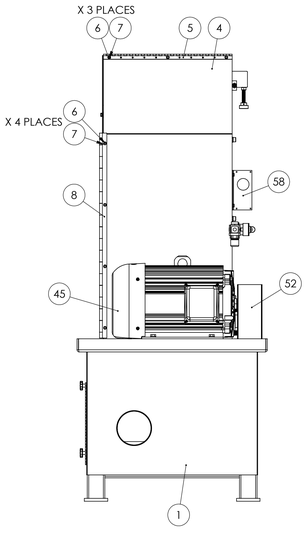

LEFT SIDE VIEW

ITEM NO.	PART NUMBER	DESCRIPTION	QTY.
1	716-007D	STAND FOR S14D VERTICAL STAND	1
2	556-069	MOTOR PLATE FOR S14D AND S14W SANDERS	1
3	125-001VERT	CHANNEL, FRAME SUPPORT FOR S14D AND S14W SANDERS	1
4	125-001A	BACK GUARD PLATE/FRAME SUPPORT FOR S14D AND S14W SANDERS	1
5	342-154	GUARD, TOP FOR S14D SANDER	1
6	HHC5025008	1/4-20 X 1/2 HHCS GR5 Z	12
7	SLWZ025	1/4 SPLIT L/W Z	12
8	147-007HINGE	HINGE FOR S14D AND S14W SIDE DOOR	1
9	147-007	SIDE DOOR FOR S14D	1
10	291-012	PLATEN SUPPORT FRAME FOR S14 SANDERS	1
11	S10-S14FRAMESTANDOFF	FRAME STAND-OFF FOR S10 AND S14 SANDERS	2
12	HHC5031008	5/16-18 X 1/2 HHCS GR5 Z	2
13	SLWZ031	5/16 SPLIT L/W Z	2
14	SLWZ050	1/2 SPLIT L/W Z	24
15	SHCA050028	1/2-13 X 1-3/4 SHCS	6
16	044-013	4 BOLT FLANGE BRG 1/2 IN FOR S10, S14 DRIVE PULLEY	2
17	SHCA050032	1/2-13 X 2 SHCS	8
18	560-041	DRIVE PULLEY WITH SPINDLE FOR S14 SANDERS	1
19	556-047	PLATE, SLEEVE BUSHING FOR S10 AND S14	1
20	714-005	SLEEVE, YOKE SHAFT FOR S10, S14	1
21	HHC5037032	3/8-16 X 2 HHCS GR5 Z	2
22	SLWZ037	3/8 SPLIT L/W Z	10
23	RLB AA-1704-15	AA-1704-15 BRONZE BUSHING 1-1/2 X 1-3/4 X 1	2
24	ZERK012000	1/8-27 X 11/16 STRT LUBE FITTING	1
25	700-010	SHAFT, YOKE FOR S14 SANDERS	1
26	960-009	YOKE, FOR S14 SANDERS	1
27	701-030	SPINDLE, IDLER FOR S14 SANDERS	1
28	560-028	IDLER PULLEY W BEARINGS FOR S14 SANDERS	1
29	ROLA031040	5/16 X 2-1/2 ROLL PIN	1
30	1-34-65	SWIVEL BRACKET & PIN FOR 2-1/2 AND 3-1/4 CYLINDER SERIES O CYLINDERS	1
31	HHC5037024	3/8-16 X 1-1/2 HHCS GR5 Z	4
32	131-013	0-3-1/4 X 2 FLAIRLINE CYLINDER FOR S 14 SANDERS	1
33	696-018	SCREW, LEVELING FOR S14 SANDERS	6
34	FJNZ062	5/8-11 F H JAM NUT Z	6
35	563-006	PLATEN FOR S14 SANDERS	1
36	FSCA037016	3/8-16 X 1 FSHCS	6
37	053-009	TRACKING BLOCK- 5/16 THREADED HOLE	1
38	SHCA025016	1/4-20 X 1 SHCS	4
39	HHC5031020	5/16-18 X 1-1/4 HHCS GR 5 Z	1
40	FHN5031	5/16-18 FHN GR5 ZINC	1
41	053-009B	TRACKING BLOCK- 1/2-13 THREADED HOLE	1
42	SPPA050020	1/2-13 X 1-1/4 SPRING PLUNGER W BROWN DELRIN NOSE ALLOY	1
43	FHN5050	1/2-13 FHN GR5 Z	7
44	441-016ASSY	TRACKING KNOB ASSEMBLY FOR S8 AND S10 SANDERS	1
45	486-038	20HP MOTOR FOR K20FS-20, K26S, S14 SANDERS	1
46	HHC5050028	1/2-13 X 1-3/4 HHCS GR5 Z	4
47	UFWZ050	1/2 USS F/W Z	6
48	049-023	SPINDLE PULLEY BUSHING FOR S14 SANDER	1
49	560-058	SPINDLE PULLEY SHEAVE FOR K20SSF-20HP AND KM20-22/20HP, MOTOR AND SPINDLE PULLEY SHEAVE FOR FOR S10 AND S14 SANDERS	2
50	049-069	MOTOR AND SPINDLE PULLEY BUSHING FOR S10 AND S14 SANDERS	1
51	051-010	V-BELT FOR S10D AND S10W	4
52	342-157	GUARD, BELT FOR S14 VERTICAL SANDERS	1
53	912-014	1/4 WAY VALVE 3P ROTARY HAND VALVE	1
54	SHCA025024	1/4-20 X 1-1/2 SHCS	2
55	02530040BLN	02530040BLN 1/4 X 3 BLACK PIPE NIPPLE	1
56	R72G2AKRMN	R72G2AKRMN 1/4" REGULATOR	1
57	18-013-212	18-013-212 1.5- 1/8 CBM-O-160	1
58	041-112	SWITCH BRACKET FOR E2PB BUTTON ENCLOSURE	1
59	HHC5050024	1/2-13 X 1-1/2 HEX HEAD CAP SCREW	2
60	711-013	SUPPORT, TABLE S10 AND S14 SANDERS	1
61	RND-0.5CFC1018X10.75	10-3/4 INCHES OF 1/2 RND CRS C1018	1
62	831-014	TRUNNION, TABLE FOR S14 SANDERS	2
63	SHCA050024	1/2-13 X 1-1/2 SHCS	2
64	829-023	TABLE, WORK FOR S10 AND S14 SANDERS	1
65	HHC5037020	3/8-16 X 1-1/4 HHCS GR5 Z	4
66	441-015	907B-2500-1.00S 1/4 THUMBSCREW 1-1/2 DIA	2

PROPRIETARY AND CONFIDENTIAL
THE INFORMATION CONTAINED IN THIS DRAWING IS THE SOLE PROPERTY OF <INSERT COMPANY NAME HERE>. ANY REPRODUCTION IN PART OR AS A WHOLE WITHOUT THE WRITTEN PERMISSION OF <INSERT COMPANY NAME HERE> IS PROHIBITED.

NEXT ASSY | USED ON
APPLICATION | DO NOT SCALE DRAWING

UNLESS OTHERWISE SPECIFIED:
DIMENSIONS ARE IN INCHES
TOLERANCES:
FRACTIONAL ±
ANGULAR: MACH ± BEND ±
TWO PLACE DECIMAL ±
THREE PLACE DECIMAL ±
INTERPRET GEOMETRIC TOLERANCING PER:
MATERIAL
FINISH

	NAME	DATE
DRAWN		
CHECKED		
ENG APPR.		
MFG APPR.		
Q.A.		

COMMENTS:

KALAMAZOO MANUFACTURING

TITLE:
14 INCH DRY VERTICAL SANDER

SIZE E | DWG. NO. S14D | REV

SCALE: 1:5 WEIGHT: SHEET 1 OF 1