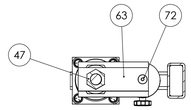

SECTION J-J

UNDERSIDE OF CYLINDER
DOWN STOP CLEVIS MOUNT

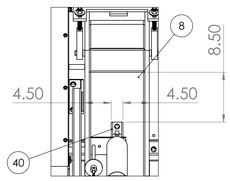

LAYOUT OF POWER DOWN CYLINDER
MOUNTING BLOCK

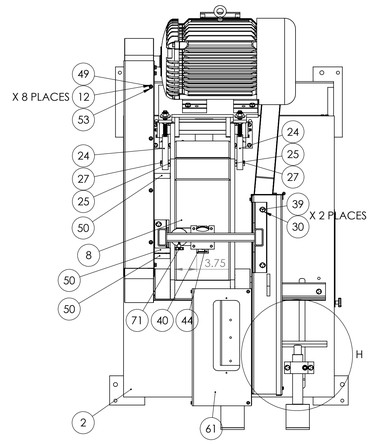

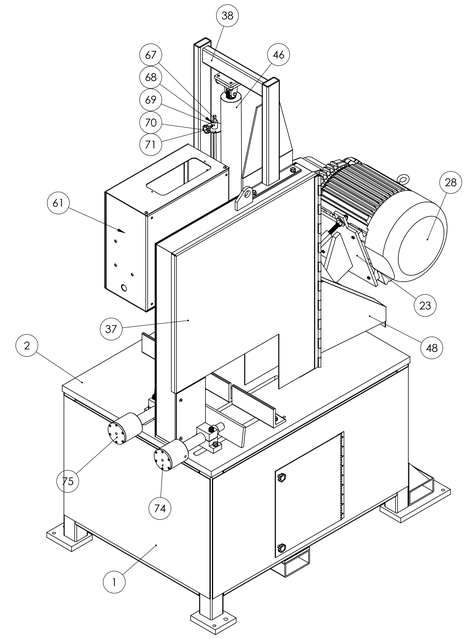

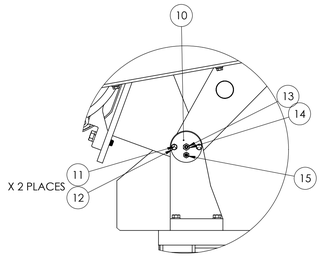

DETAIL C

ENDCAP DETAILS
X 2 ENDCAPS

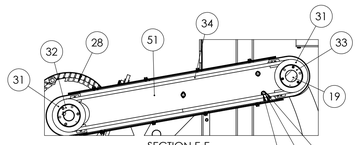

SECTION E-E

INTERNAL OF BELTS AND PULLEYS

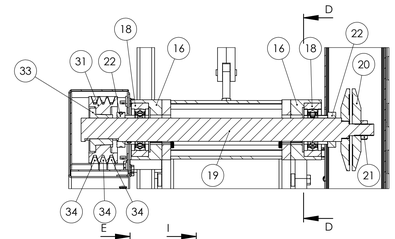

SECTION A-A

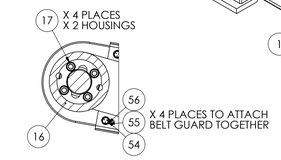

SECTION D-D

TYPICAL INTERNAL BEARING
BLOCK HOUSING VIEWS

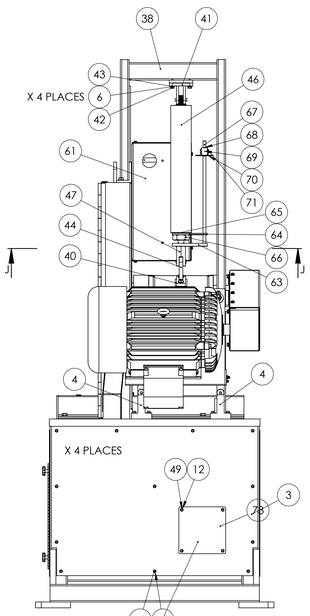

VACUUM PORT IS
342-133 X 12 PLACES

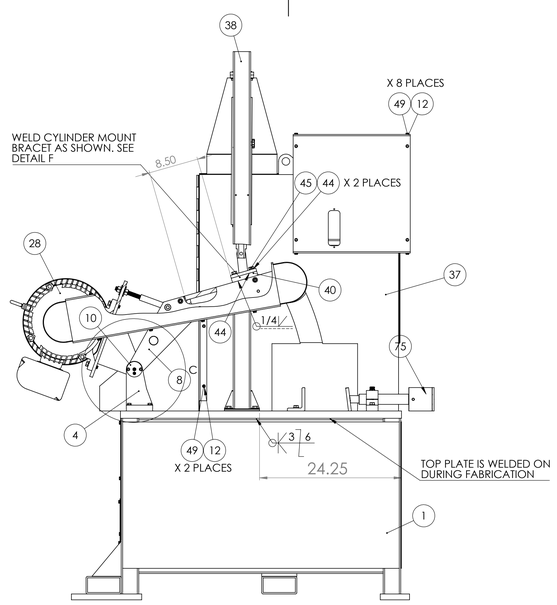

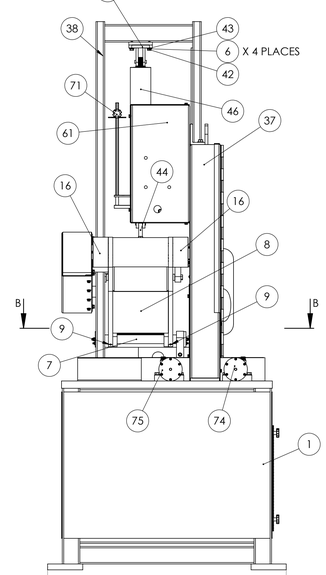

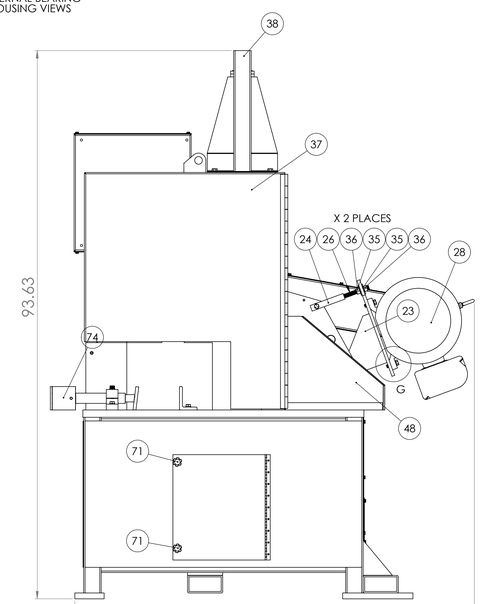

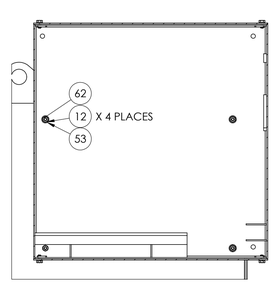

SECTION I-I

INTERIOR OF PHV
CONTROLS BOX

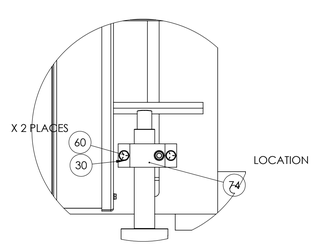

DETAIL H

CV-26 AIR VISE DETAILS

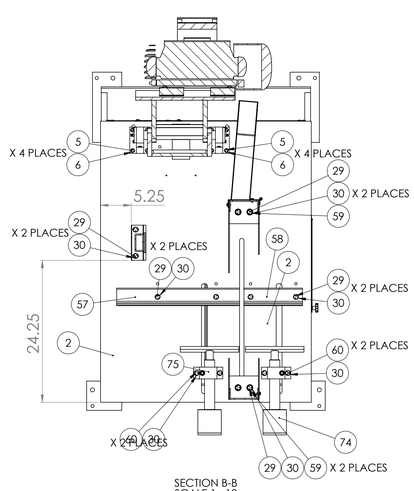

SECTION B-B
SCALE 1 : 10

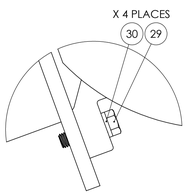

DETAIL G

MOTOR MOUNT
FASTENERS
SCALE 1 : 2

ITEM NO.	PART NUMBER	DESCRIPTION	QTY.
1	716-004	K26S STAND ASSEMBLY	1
2	556-118	TOP PLATE FOR K26S AND K30	1
3	716-004BACKPANEL1	BACK ACCESS PANEL FOR K26S WITH NO OSC STAND ASSEMBLY	1
4	831-002	TRUNNION, LEFT AND RIGHT SET	2
5	HHC5037028	3/8-16 X 1-3/4 HHCS GR5 Z	8
6	SLWZ037	3/8 SPLIT L/W Z	15
7	562-029	PIN, TRUNNION (NON OSC) FOR K26S	1
8	002-036	SAW ARM ASSEMBLY FOR K26S (NEW STYLE)	1
9	SSKA031006	5/16-18 X 3/8 SOC SET KNURL PT.	2
10	641-002	TRUNNION CAP	2
11	HHC5025016	1/4-20 X 1 HHCS GR5 Z	4
12	SLWZ025	1/4 SPLIT L/W Z	44
13	SSCA031016	5/16-18 X 1 SOC SET CONE PT	2
14	FHN5031	5/16-18 FHN GR5 ZINC	2
15	ZERK012000	1/8-27 X 11/16 STRT LUBE FITTING	2
16	386-029	BEARING HOUSING FOR K26-44 SAW ARM	2
17	SHCA051024	1/2-20 X 1-1/2 SHCS	8
18	044-016	SEALMASTER SPINDLE BEARING FOR K26/K30	2
19	701-108	K26 SPINDLE W/TIGHT FLANGE-25HP+MOTOR WITH 1" ARBOR	1
20	292-013	LOOSE FLANGE FOR K26 AND K20FS SAWS	1
21	537-027	SPINDLE NUT	1
22	SC200D	2" SPLIT COLLAR	2
23	556-098	MOTOR MOUNT PLATE ASSEMBLY	1
24	556-098-TENSION POST	TENSION POST, MOTOR MOUNT PLATE ASSEMBLY	2
25	556-098-A	SPACER FOR MOTOR TENSION POST	2
26	556-098-B	6 INCHES OF 5/8-11 THREADED ROD	2
27	HHC5050040	1/2-13 X 2-1/2 HHCS GR5 Z	2
28	486-044	MOTOR	1
29	HHC5050028	1/2-13 X 1-3/4 HHCS GR5 Z	14
30	SLWZ050	1/2 SPLIT L/W Z	22
31	560-106	BROWNING SHEAVE	2
32	049-118	SPLIT TAPER BUSHING	1
33	049-119	SPLIT TAPER BUSHING	1
34	051-031	HY-T WEDGE BELT	3
35	UFWZ062	5/8 USS F/W Z	4
36	FHN5062	5/8-11 FHN GR5 Z	4
37	342-040	GUARD, WHEEL FOR NON OSC K26 SAWS	1
38	291-057	FRAME, FOR K26 PHV	1
39	HHC5050016	1/2-13 X 1 HHCS GR5 Z	2
40	CYLINDER MOUNTING BLOCK	CYLINDER MOUNTING BRACKET/WELDED TO ARM	1
41	1-34-65	SWIVEL BRACKET & PIN FOR CYLINDER	1
42	HHC5037020	3/8-16 X 1-1/4 HHCS GR5 Z	4
43	UFWZ037	3/8 USS F/W Z	7
44	041-116	T BRACKET, FOR K26S PHV LOWER CYLINDER MOUNT	1
45	HHC5050020	1/2-13 X 1-1/4 HHCS GR5 Z	2
46	131-009	CYLINDER FOR PH-26 AND PH30	1
47	1-35-65	ROD CLEVIS AND PIN FOR CYLINDER	1
48	342-141	GUARD, SPARK DEFLECTOR FOR K26 WHEEL GUARD	1
49	HHC5025008	1/4-20 X 1/2 HHCS GR5 Z	36
50	699-051	SPACER, FOR K26S BELT GUARD	3
51	342-142	GUARD, INNER BELT FOR K26S SAWS	1
52	HHC5037056	3/8-16 X 3-1/2 HHCS GR5 Z	3
53	UFWZ025	1/4 USS F/W Z	12
54	HHC5031008	5/16-18 X 1/2 HHCS GR5 Z	4
55	SLWZ031	5/16 SPLIT L/W Z	4
56	UFWZ031	5/16 USS F/W Z	4
57	293-005	FENCE, LEFT HAND FOR K26 SAWS	1
58	293-006	FENCE, RIGHT HAND FOR K26 SAWS	1
59	UFWZ050	1/2 USS F/W Z	4
60	HHC5050032	1/2-13 X 2 HHCS GR5 Z	4
61	PH-26-CONTROLSBOX	PHV CONTROLS BOX, FOR PH-26	1
62	FHN5025	1/4-20 FHN GR5 Z	4
63	041-043	CLEVIS MOUNT FOR K26 CYLINDER DOWN STOP	1
64	041-044	CYLINDER MOUNT FOR K26 CYLINDER DOWN STOP	1
65	131-009SPACER	SPACER FOR K26 CYLINDER	1
66	FJN5163	1-5/8-12 FH JAM NUT GR5	1
67	041-045	ROD FOR K26 CYLINDER DOWN STOP	1
68	ROLA012016	1/8 X 1 ROLL PIN	1
69	041-046	STOPPER FOR K26 CYLINDER DOWN STOP	1
70	041-047	SWITCH TRIP FOR K26 CYLINDER DOWN STOP	1
71	441-015	THUMBSCREW	3
72	FSCA037016	3/8-16 X 1 FSHCS	1
73	342-133C	BLANK COVER FOR INCH VACUUM PORT	1
74	AV-26	COMPLETE AIR VISE OPTION FOR K26 SAWS	2
75	342-143	GUARD, OUTER BELT FOR K26S SAWS	1

PROPRIETARY AND CONFIDENTIAL
THE INFORMATION CONTAINED IN THIS DRAWING IS THE SOLE PROPERTY OF <INSERT COMPANY NAME HERE>. ANY REPRODUCTION IN PART OR AS A WHOLE WITHOUT THE WRITTEN PERMISSION OF <INSERT COMPANY NAME HERE> IS PROHIBITED.

NEXT ASSY | USED ON
APPLICATION

UNLESS OTHERWISE SPECIFIED:
DIMENSIONS ARE IN INCHES
TOLERANCES:
FRACTIONAL ±
ANGULAR: MACH ± BEND ±
TWO PLACE DECIMAL ±
THREE PLACE DECIMAL ±
INTERPRET GEOMETRIC TOLERANCING PER:
MATERIAL
FINISH
DO NOT SCALE DRAWING

	NAME	DATE
DRAWN		
CHECKED		
ENG APPR.		
MFG APPR.		
Q.A.		
COMMENTS:		

KALAMAZOO INDUSTRIES, INC.

TITLE:
K26S WITHOUT OSCILLATION

SIZE E | DWG. NO. K26S-NO OSC | REV

SCALE: 1:5 WEIGHT: SHEET 1 OF 1