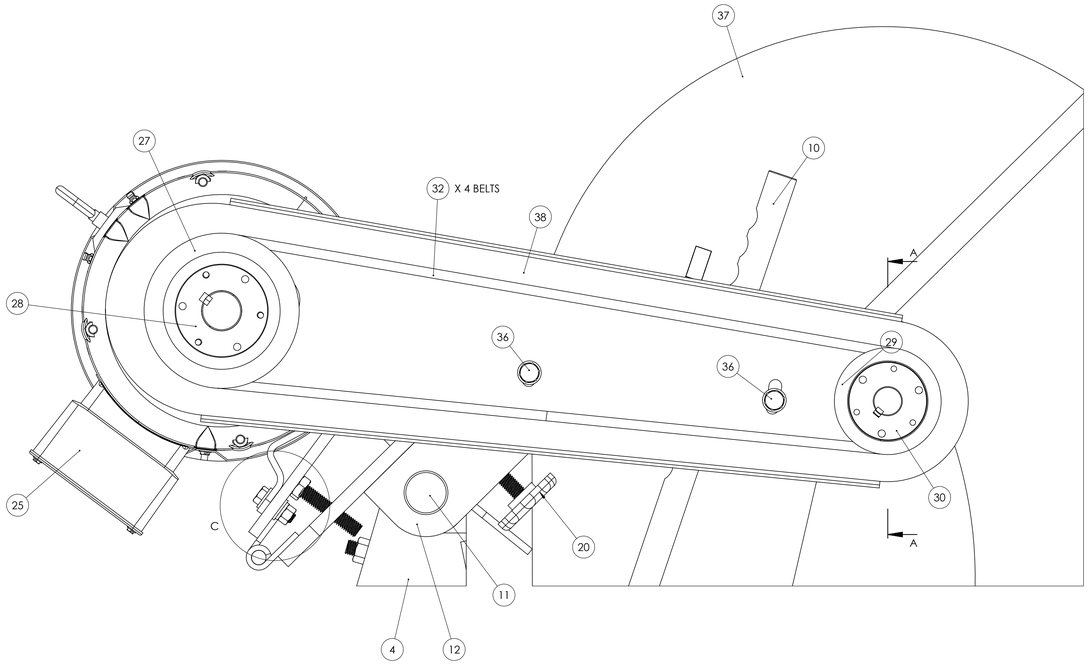

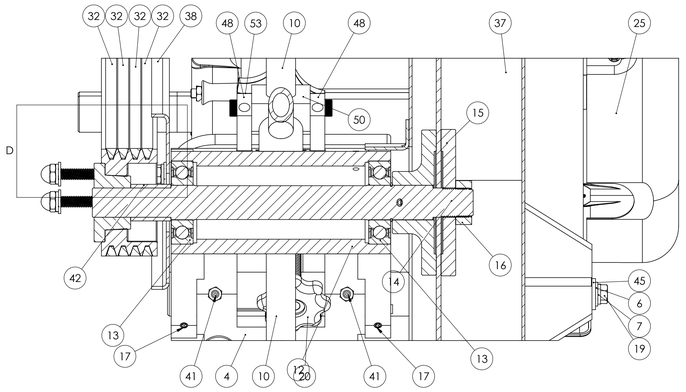

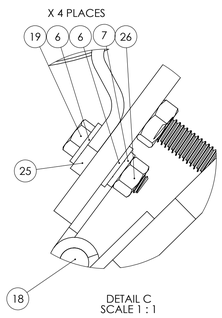

DETAIL C
SCALE 1 : 1

MOTOR ATTACHMENT DETAILS

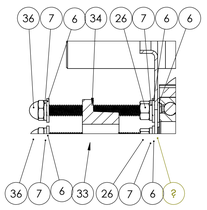

DETAIL D

ATTACHING BELT GUARD DETAILS

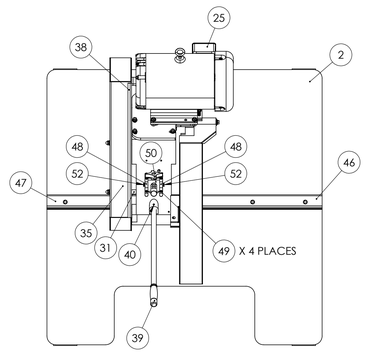

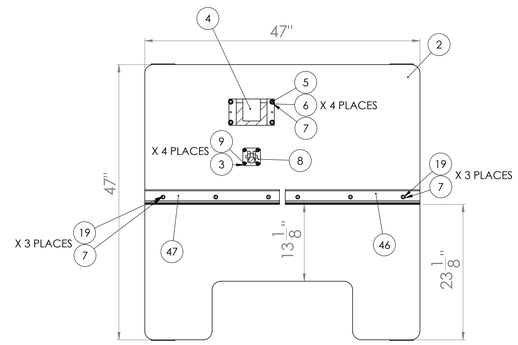

SECTION A-A

INTERNAL SPINDLE/ FRONT OF TRUNNION
SCALE 1 : 2

SECTION B-B

TOP VIEW LAYOUT

ITEM NO.	PART NUMBER	DESCRIPTION	
1	716-033	STAND ASSEMBLY FOR K20FS	1
2	829-041	TOP PLATE FOR K20FS	1
3	SLWZ031	5/16 SPLIT L/W Z	5
4	831-021	TRUNNION FOR KM16-18, K16-18, K20SSF (NEW STYLE)	1
5	HHC5037036	3/8-16 X 2-1/4 HHCS GR 5 Z	4
6	UFWZ037	3/8 USS F/W Z	23
7	SLWZ037	3/8 SPLIT L/W Z	24
8	1-34-4	SWIVEL BRACKET FOR 2 AND 2-1/2 CYLINDERS	1
9	HHC5031020	5/16-18 X 1-1/4 HHCS GR 5 Z	4
10	709-013	STOP, ARM FOR K20FS SAW	1
11	562-050	PIN, TRUNNION FOR K20RS	1
12	002-005	SAW ARM FOR K16-18, KM16-18, AND K20SSF SAW	1
13	044-004	K20 SPINDLE BEARING	2
14	701-010	SPINDLE W TIGHT FLANGE FOR K16-18, K20SSF, K20E SAWS	1
15	292-011	LOOSE FLANGE FOR K16-20, KM16-18, KM20-22	1
16	537-027	SPINDLE NUT FOR K16-20	1
17	SSKA031006	5/16-18 X 3/8 SOC SET KNURL PT.	2
18	486-010	MOTOR MOUNT PLATE K16-20 ASSEMBLY	1
19	HHC5037020	3/8-16 X 1-1/4 HHCS GR5 Z	15
20	696-029	MOTOR PLATE TENSION SCREW FOR K16-K20 SAWS	1
21	FJNZ050	1/2-13 F H JAM NUT Z	1
22	CRBZ031040	5/16-18 X 2-1/2 CARRIAGE BOLT Z	1
23	UFWZ031	5/16 USS F/W Z	1
24	FHN5031	5/16-18 FHN GR5 ZINC	1
25	486-020	15HP MOTOR FOR K20SSF-15, K20SW-15, KM20-22/15, K20FS, K20E	1
26	FHN5037	3/8-16 FHN GR5 Z	7
27	560-046	MOTOR PULLEY SHEAVE FOR K16-18, KM16-18, K20SSF-15, KM20-22/15, KM20-22W/15 (K20SSF 7 1/2 HP), SPINDLE PULLEY SHEAVE FOR K20SW-15HP & 20HP	1
28	049-003	MOTOR PULLEY BUSHING FOR FOR K16-18, KM16-18, K20SSF-15, K20RS-15, K20SW-15, KM20-22-15HP, KM20-22W-15, S10D	1
29	560-047	SPINDLE PULLEY SHEAVE FOR K16-18, KM16-18, K20SSF-15, K20RS, KM20-22/15, MOTOR PULLEY SHEAVE FOR K20SW-20HP	1
30	049-004	BUSHING FOR K16-18, K20SSF-15HP, K20RS-15, KM16-18, KM20-22-15HP SPINDLE PULLEY	1
31	123-003	COLLAR FOR S4/ SPACER FOR K20 BELT GUARD	1
32	051-005	V-BELT FOR K16-18, K20SSF, K20E, K20RS, K20SW, KM20AS	4
33	RND-0.375-16X6.25	6-1/4 INCHES OF 3/8-16 THREADED ROD	1
34	RND0.375-16X5.375	5-3/8 INCHES OF 3/8-16 THREADED ROD	1
35	342-039	OUTER GUARD, BELT FOR K16-18 AND K20SSF SAWS	1
36	CPNZ037	3/8-16 CAP NUT NICKEL	2
37	342-112	HALF ROUND GUARD FOR K20SSF	1
38	342-039A	GUARD, INNER BELT FOR K16-18, KM16-18, K20SSF SAWS	1
39	381-009	HANDLE WITH GRIP FOR K16-20 ABRASIVE SAW	1
40	SSKA025006	1/4-20 X 3/8 SOC SET KNURL PT.	1
41	ZERK012000	1/8-27 X 11/16 STRT LUBE FITTING	2
42	049-116	SPACER BUSHING FOR K20/15HP SERIES SPINDLE	1
43	RND-0.5-13 THRD ROD X 1.75 LONG	1-3/4 INCHES OF 1/2-13 THREADED ROD	1
44	FHN5050	1/2-13 FHN GR5 Z	1
45	UFWZ050	1/2 USS F/W Z	1
46	293-010R	RIGHT SIDE FENCE FOR K20FS SAW	1
47	293-010L	LEFT SIDE FENCE FOR K20FS SAW	1
48	041-037	HSM14 UPPER CYLINDER BRACKET	2
49	SHCA025024	1/4-20 X 1-1/2 SHCS	4
50	053-035	PIVOTING BLOCK FOR K20FS DOWN STOP ROD	1
51	20INCHWHEEL		1
52	SSBA037008	3/8 X 1/2 SOC SHOULDER BOLT	2
53	441-011K20FS	MODIFIED 2FS, 2FS72, 2FSM, 2SK7 TRACKING KNOB FOR K20FS	1

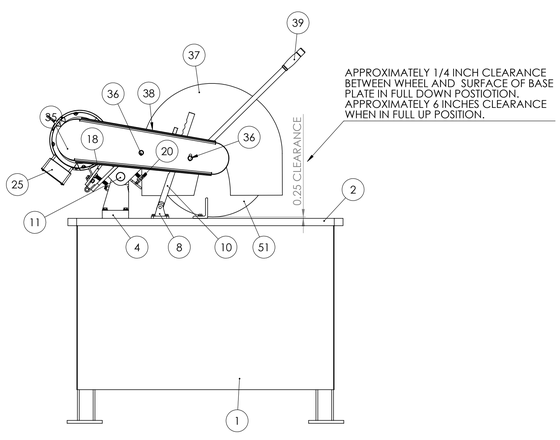

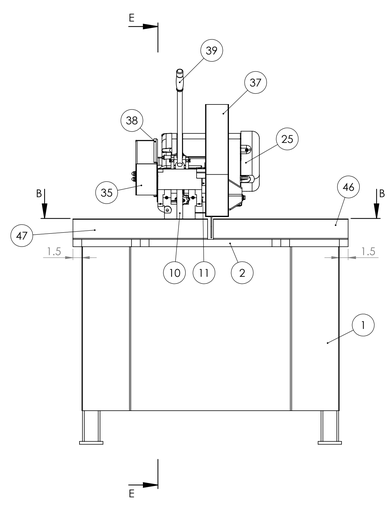

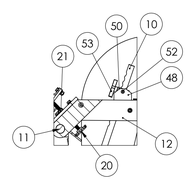

SECTION E-E
SCALE 1 : 10

INTERNAL SIDE VIEW OF MOTOR TENSION SCREW AND DOWN STOP PIVOTING DETAILS

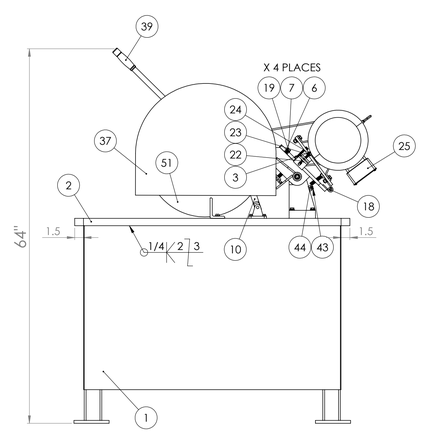

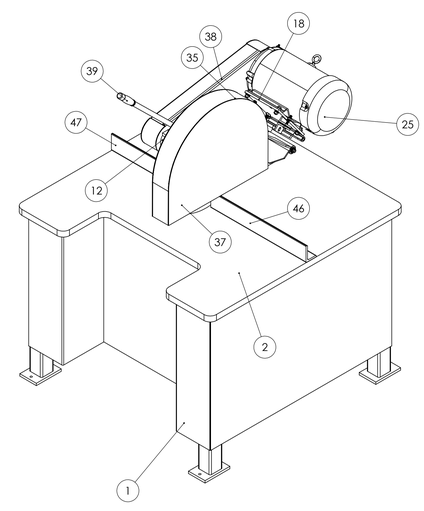

PROPRIETARY AND CONFIDENTIAL
THE INFORMATION CONTAINED IN THE DRAWING IS THE SOLE PROPERTY OF <INSERT COMPANY NAME HERE>. ANY REPRODUCTION IN PART OR AS A WHOLE WITHOUT THE WRITTEN PERMISSION OF <INSERT COMPANY NAME HERE> IS PROHIBITED.

		UNLESS OTHERWISE SPECIFIED:	NAME	DATE
		DIMENSIONS ARE IN INCHES TOLERANCES: FRACTIONAL ± ANGULAR: MACH ± BEND ± TWO PLACE DECIMAL ± THREE PLACE DECIMAL ±	DRAWN	
			CHECKED	
			ENG APPR.	
			MFG APPR.	
		INTERPRET GEOMETRIC TOLERANCING PER:	Q.A.	
		MATERIAL	COMMENTS:	
NEXT ASSY	USED ON	FINISH		
APPLICATION		DO NOT SCALE DRAWING		

KALAMAZOO MANUFACTURING, INC.

TITLE: K20 15HP FOUNDRY SAW

SIZE E DWG. NO. K20FS-15HP REV

SCALE: 1:5 WEIGHT: SHEET 1 OF 2